CYW9BTM2BASE3-20829 Base Board

CONTENTS

PAGE	DESCRIPTION
01	Title, Table of Contents & Drawing Numbers
02	Functional Block Diagram
03	Power Supply Block Diagram
04	Power Supply Input
05	Voltage Regulators
06	KitProg3 Controller
07	Power Sel & Level Translators
08	Arduino Header & Peripherals
09	On Board sensors
10	M.2 Interface
11	Accessories
12	Revision History

Drawing Numbers

PCBA	121-60651-01
PCB	600-60651-01
FAB DRW	610-60651-01
ASSY DRW	620-60651-01
SCH DRW	630-60651-01

Legal Disclaimer :
The information given in this document shall in no event be regarded as a guarantee of conditions or characteristics. With respect to any examples or hints given herein, any typical values stated herein and/or any information regarding the application of the device, Infineon Technologies hereby disclaims any and all warranties and liabilities of any kind, including without limitation, warranties of non-infringement of intellectual property rights of any third party.

SCH Title : CYW9BTM2BASE3-20829 Base Board				
Page Title: Title Page				
Size	Document Number	Drawn By	Approved By	Rev
A4	630-60651-01	INBA	RINKU	4.00
Date: Monday, August 07, 2023		Sheet 1 of 12		

CYW20829 Dev Kit Block Diagram

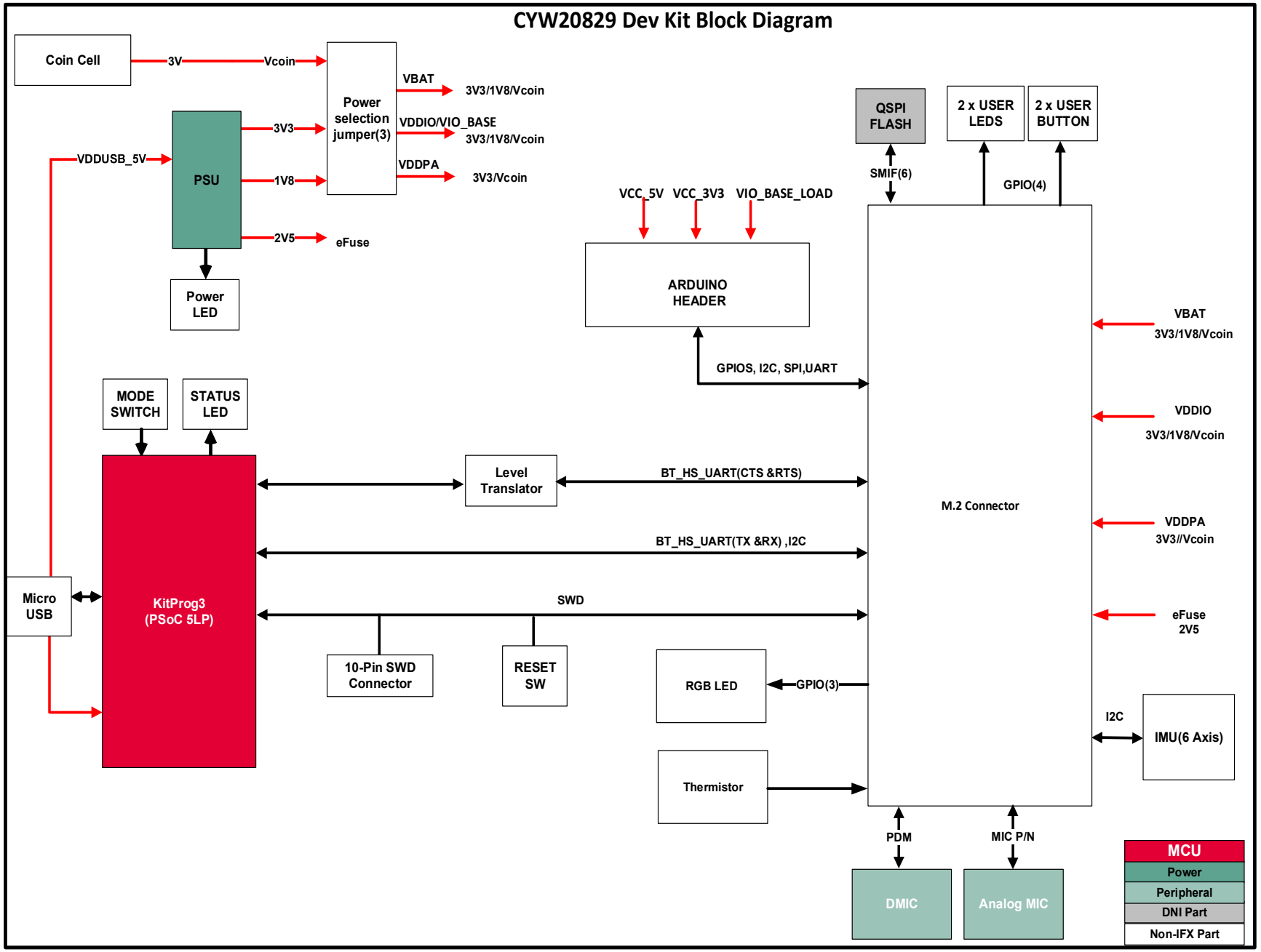

Legal Disclaimer :
The information given in this document shall in no event be regarded as a guarantee of conditions or characteristics. With respect to any examples or hints given herein, any typical values stated herein and/or any information regarding the application of the device, Infineon Technologies hereby disclaims any and all warranties and liabilities of any kind, including without limitation, warranties of non-infringement of intellectual property rights of any third party.

SCH Title : CYW9BTM2BASE3-20829 Base Board				
Page Title: Functional Block Diagram				
Size	Document Number	Drawn By	Approved By	Rev
A4	630-60651-01	INBA	RINKU	4.00
Date: Monday, August 07, 2023		Sheet 2 of 12		

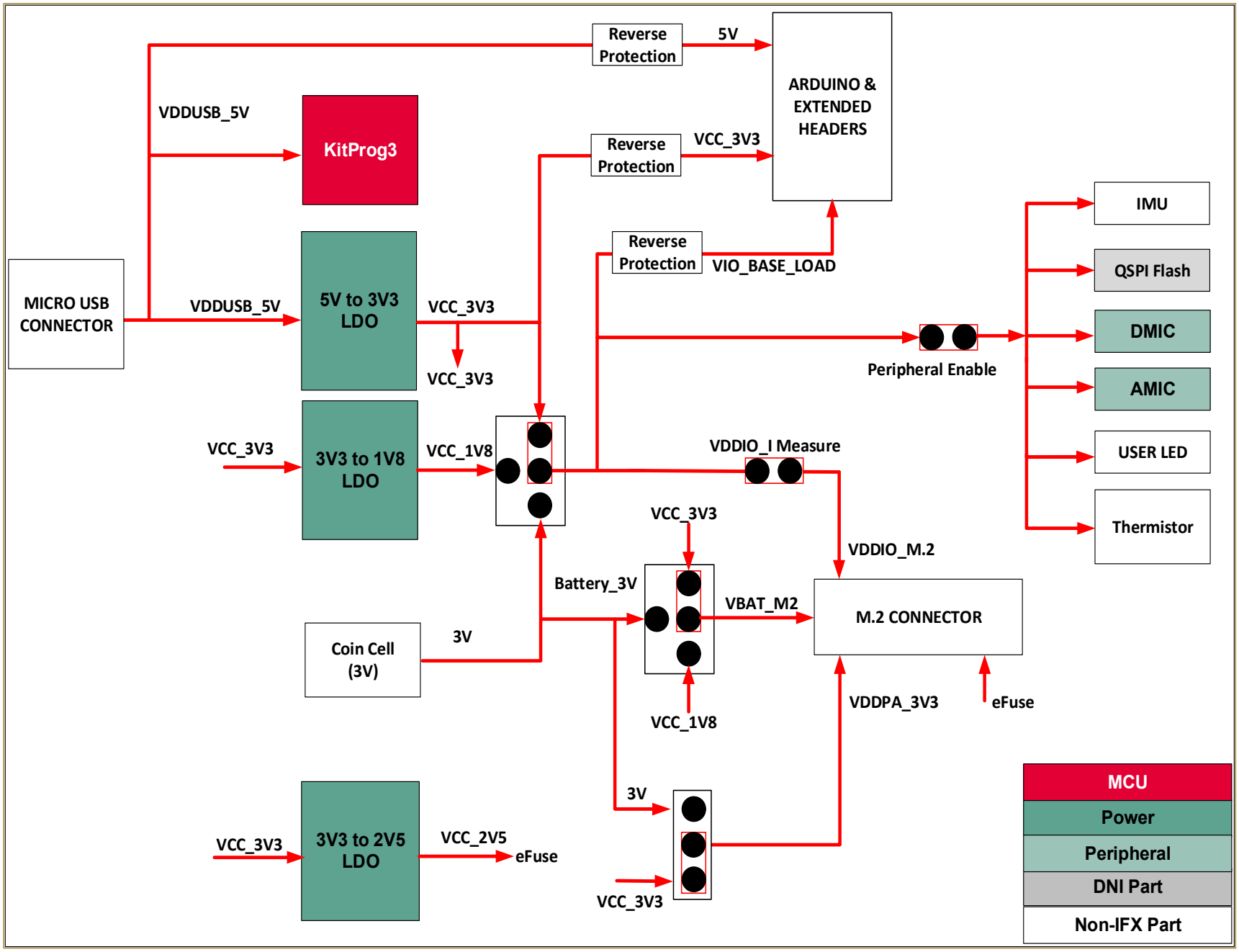

Legal Disclaimer :
The information given in this document shall in no event be regarded as a guarantee of conditions or characteristics. With respect to any examples or hints given herein, any typical values stated herein and/or any information regarding the application of the device, Infineon Technologies hereby disclaims any and all warranties and liabilities of any kind, including without limitation, warranties of non-infringement of intellectual property rights of any third party.

SCH Title : CYW9BTM2BASE3-20829 Base Board

Page Title: Power Supply Block Diagram

Size	Document Number	Drawn By	Approved By	Rev
A4	630-60651-01	INBA	RINKU	4.00

Date: Monday, August 07, 2023 Sheet 3 of 12

Micro USB-Type B Connector

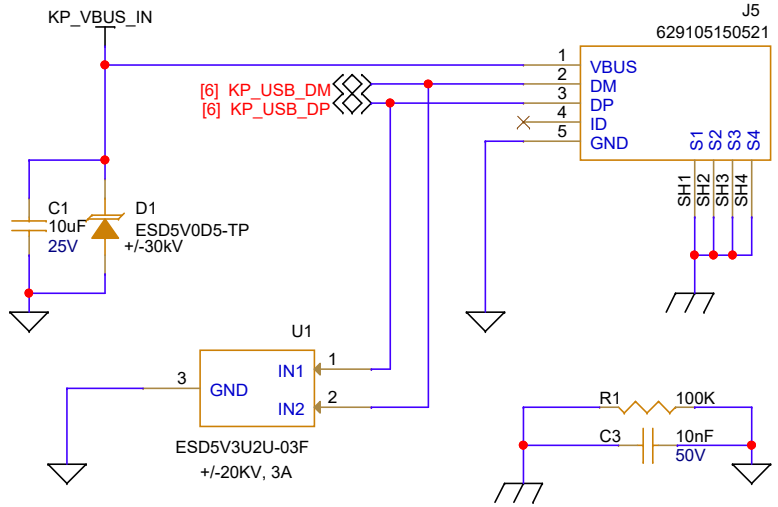

CR2032 Coin Cell Holder

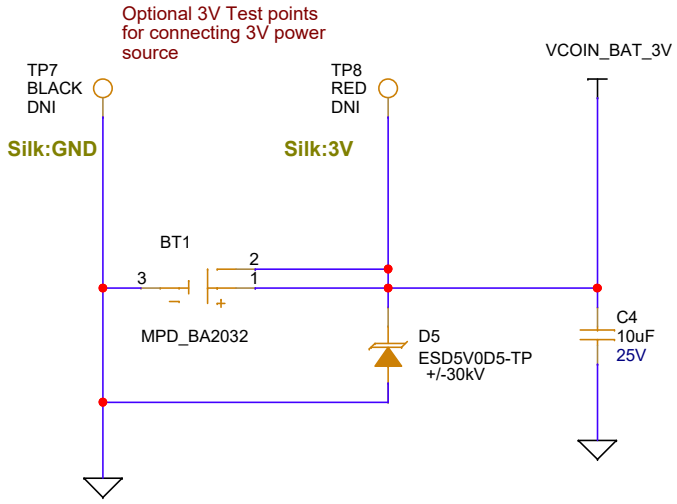

5 V to 3V3 LDO Circuit

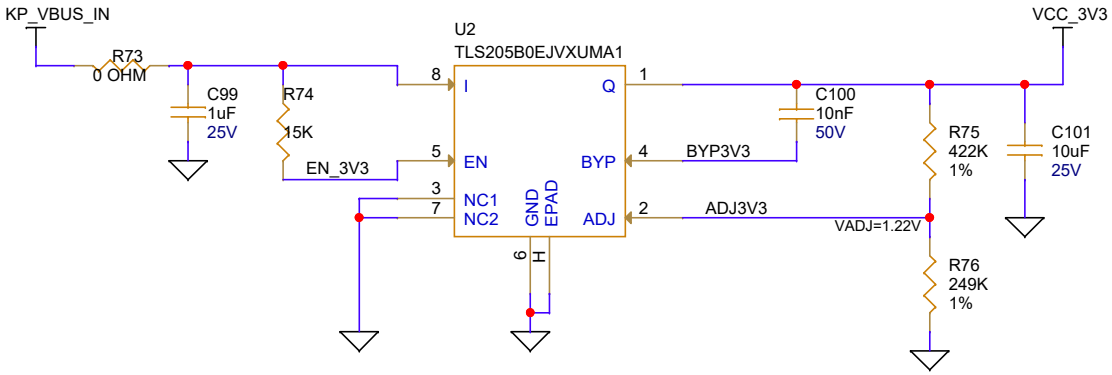

Power LED

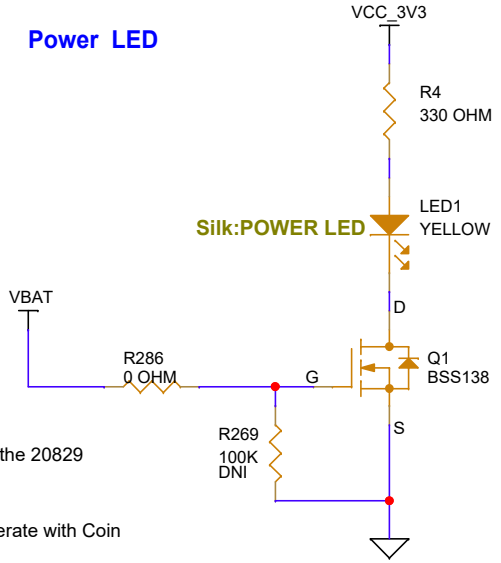

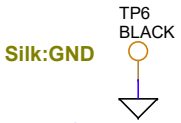

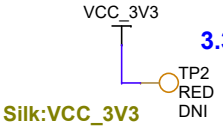

Power Status LED will be glowing once the 20829 VBAT available to M.2 Pin

Power status will not available when operate with Coin cell to save the power

Legal Disclaimer :
The information given in this document shall in no event be regarded as a guarantee of conditions or characteristics. With respect to any examples or hints given herein, any typical values stated herein and/or any information regarding the application of the device, Infineon Technologies hereby disclaims any and all warranties and liabilities of any kind, including without limitation, warranties of non-infringement of intellectual property rights of any third party.

SCH Title :	**CYW9BTM2BASE3-20829 Base Board**			
Page Title:	**Power Supply Input**			
Size	Document Number	Drawn By	Approved By	Rev
A4	**630-60651-01**	**INBA**	**RINKU**	**4.00**
Date:	Monday, August 07, 2023	Sheet	**4** of **12**	

5 V to 1V8 LDO Circuit

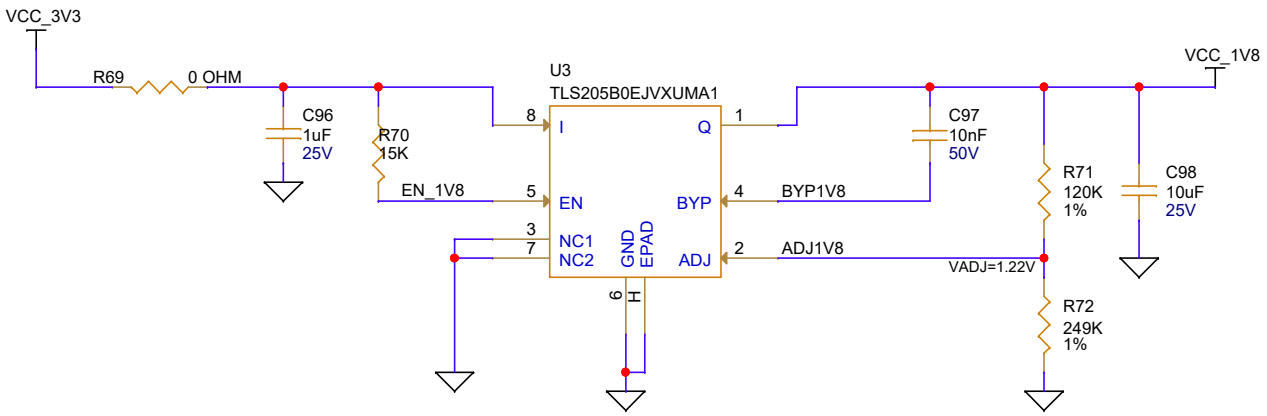

1.8V Test Points

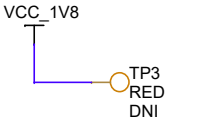

Silk:VCC_1V8

2V5 LDO Circuit for eFuse Voltage

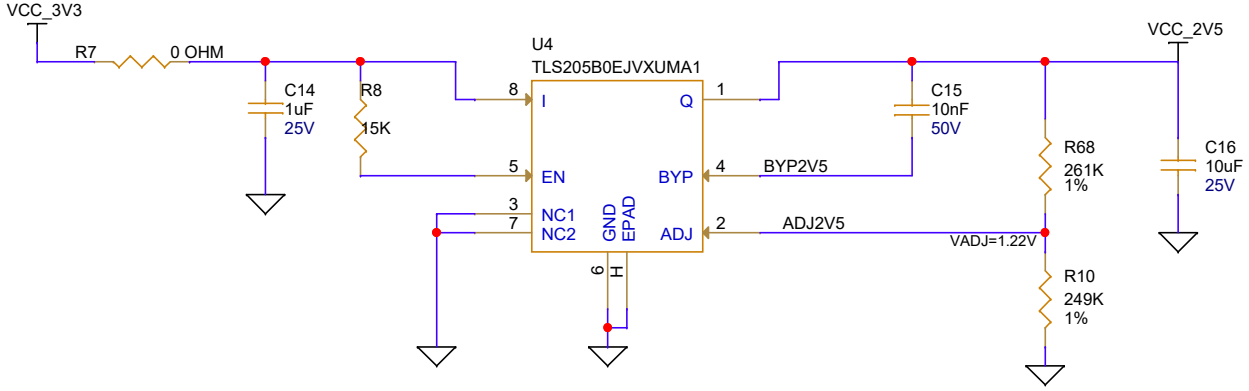

2.5V Test Points

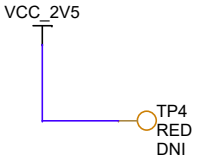

Silk:VCC_2V5

Legal Disclaimer :
The information given in this document shall in no event be regarded as a guarantee of conditions or characteristics. With respect to any examples or hints given herein, any typical values stated herein and/or any information regarding the application of the device, Infineon Technologies hereby disclaims any and all warranties and liabilities of any kind, including without limitation, warranties of non-infringement of intellectual property rights of any third party.

SCH Title : CYW9BTM2BASE3-20829 Base Board

Page Title: Voltage Regulators

Size	Document Number	Drawn By	Approved By	Rev
A4	630-60651-01	INBA	RINKU	4.00

Date: Monday, August 07, 2023 Sheet 5 of 12

PSoC 5LP based KitProg3

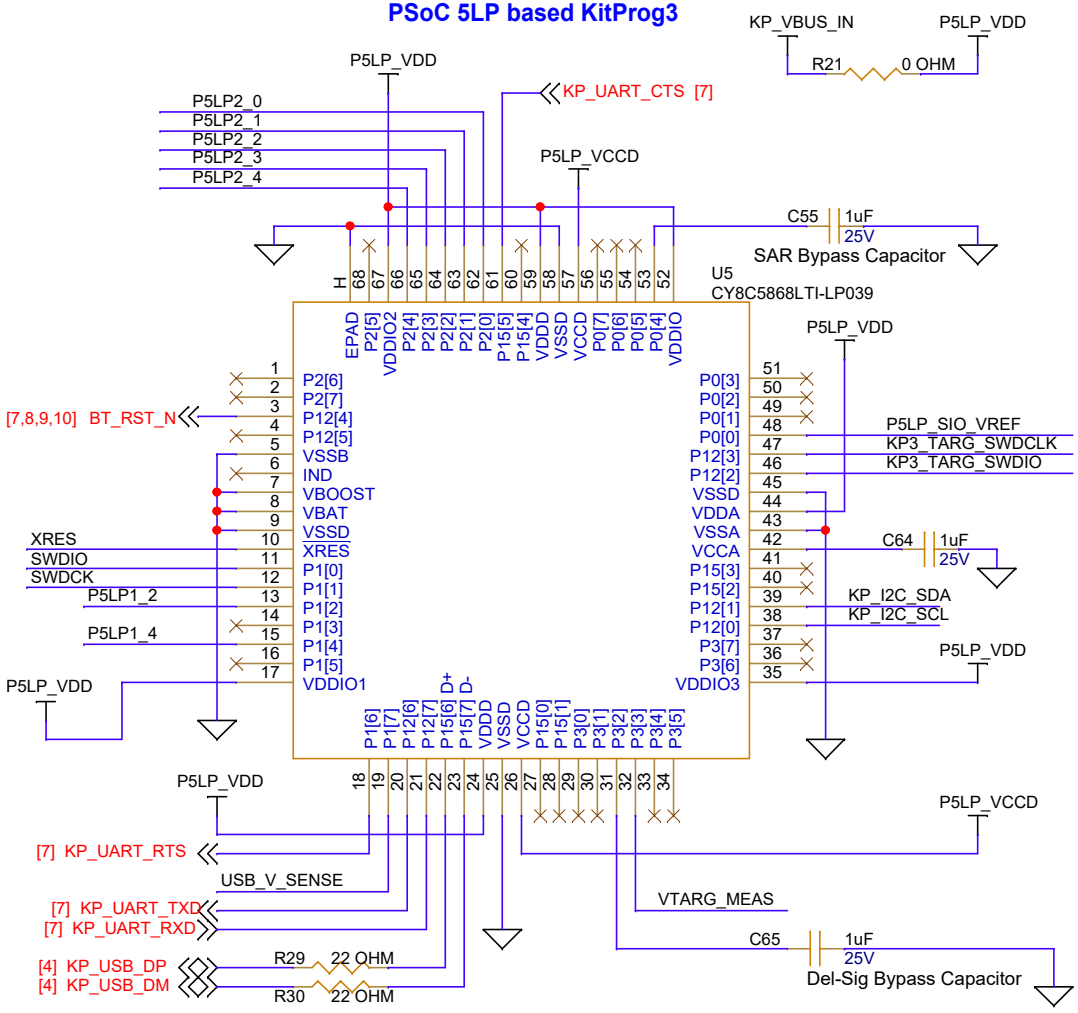

Decoupling Capacitors

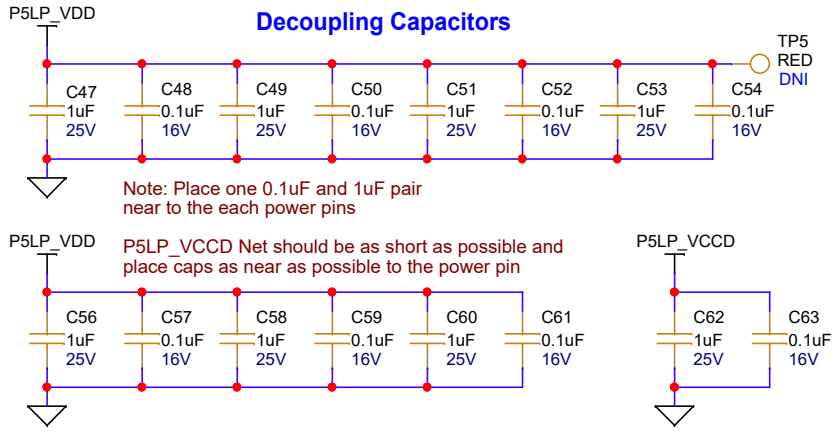

Voltage Monitoring

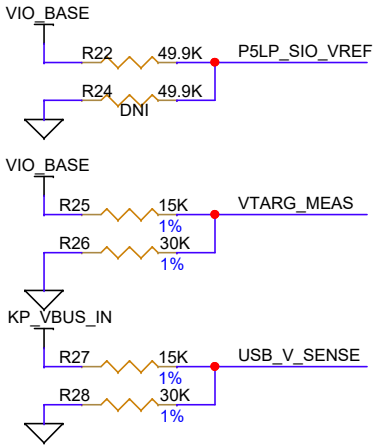

KitProg3 Status LED

Silk:KITPROG3 STATUS

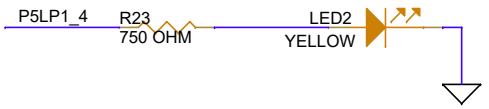

Mode Switch

Silk:MODE SELECT

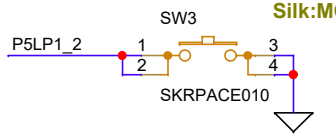

5-Pin Kitprog Programming Header

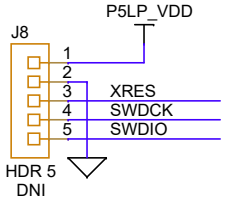

KitProg3 H/W Revision

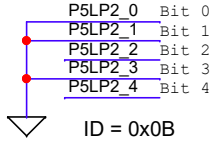

Note: GND is read as binary "1" and floating as "0".

KitProg3 I2C Interface

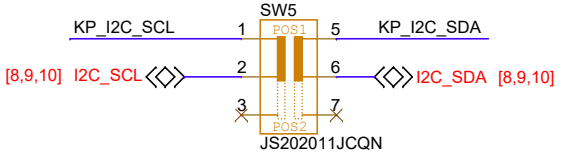

For COIN CELL OPERATION, place the SW5 in POS2 to isolate the Leakage path into KP3 section, Default position is POS1

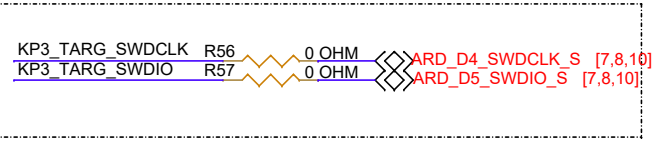

Legal Disclaimer :
The information given in this document shall in no event be regarded as a guarantee of conditions or characteristics. With respect to any examples or hints given herein, any typical values stated herein and/or any information regarding the application of the device, Infineon Technologies hereby disclaims any and all warranties and liabilities of any kind, including without limitation, warranties of non-infringement of intellectual property rights of any third party.

SCH Title : CYW9BTM2BASE3-20829 Base Board				
Page Title: KitProg3 Controller				
Size	Document Number	Drawn By	Approved By	Rev
A4	630-60651-01	INBA	RINKU	4.00
Date: Tuesday, August 08, 2023		Sheet 6 of 12		

20829 VBAT_M2 Power selection

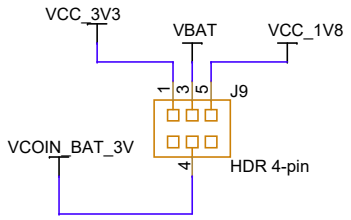

TABLE: 20829 VABT_VOLTAGE SELECTION JUMPER SET

JUMPER SETTING	O/P VOLTAGE
SHORT 1 & 3	VCC_3V3
SHORT 5 & 3	VCC_1V8
SHORT 4 & 3	VCOIN_BAT

20829 VIO_BASE Power selection

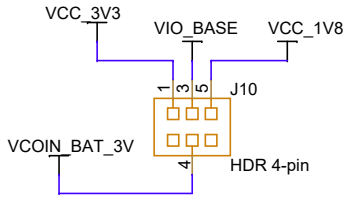

TABLE: 20829 VIO_BASE SELECTION JUMPER SET

JUMPER SETTING	O/P VOLTAGE
SHORT 1 & 3	VCC_3V3
SHORT 5 & 3	VCC_1V8
SHORT 4 & 3	VCOIN_BAT

20829 VDDPA Power Selection

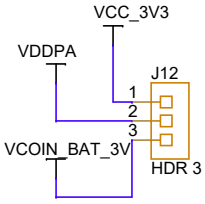

TABLE: 20829 VDDPA SELECTION JUMPER SET

JUMPER SETTING	O/P VOLTAGE
SHORT 1 & 2	VCC_3V3
SHORT 3 & 2	VCOIN_BAT_3V

VDDPA selection does not have 1V8 option, because VDDPA need >2V5

BT UART Level Translator

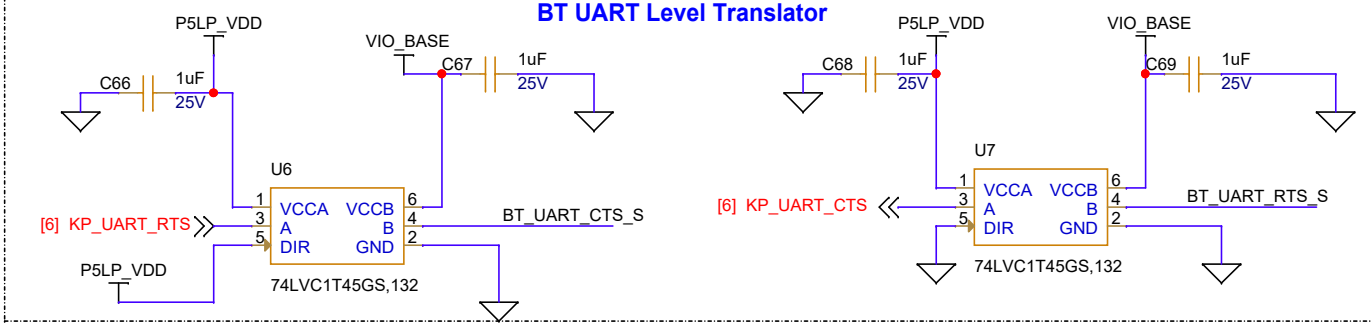

UART Selection to KP3 or ARD Sheild GPIO Selection

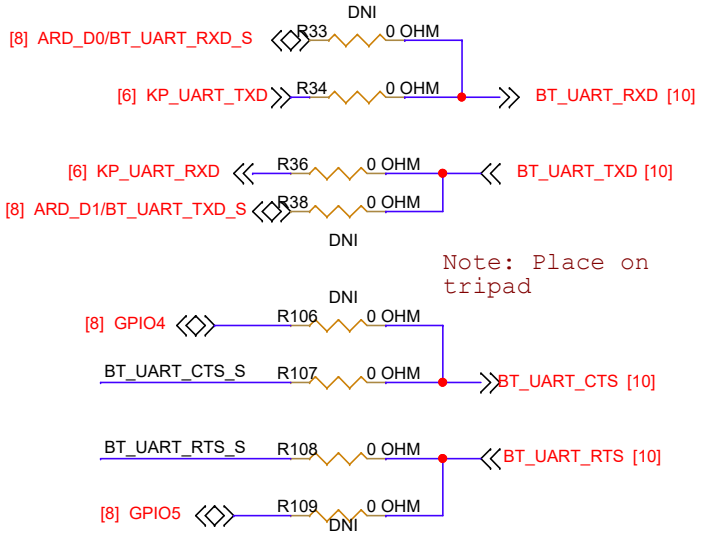

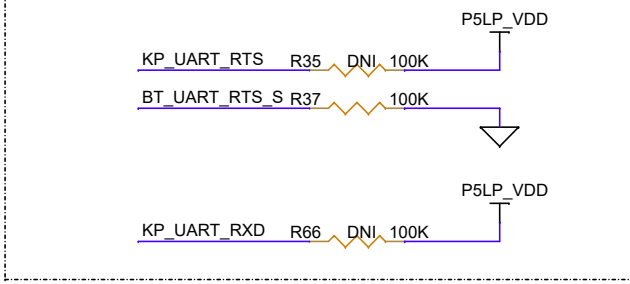

20829 Target Program/Debug Header

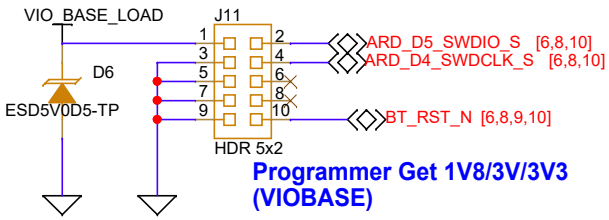

Programmer Get 1V8/3V3/3V3 (VIOBASE)

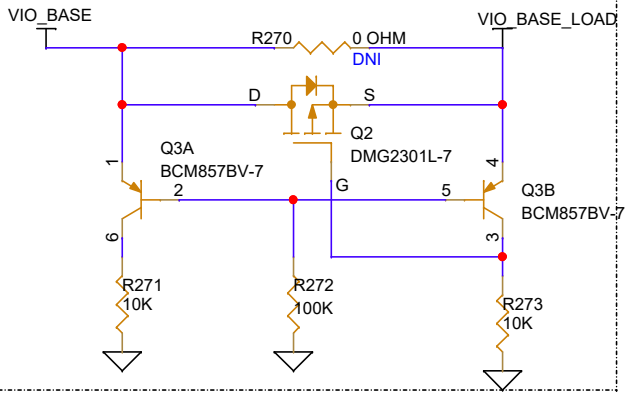

20829 VDDIO Current Measurement and eFuse Voltage selection Jumper

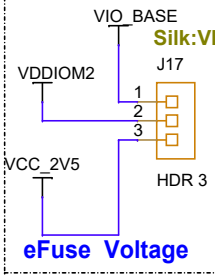

Silk:VDDIO I MEASURE

TABLE: VDDIO CURRENT MEASURE and eFuse voltage JUMPER SET

JUMPER SETTING	O/P VOLTAGE
SHORT 1 & 2	VIO_BASE
SHORT 3 & 2	eFuse Voltage(2V5)

Legal Disclaimer :
The information given in this document shall in no event be regarded as a guarantee of conditions or characteristics. With respect to any examples or hints given herein, any typical values stated herein and/or any information regarding the application of the device, Infineon Technologies hereby disclaims any and all warranties and liabilities of any kind, including without limitation, warranties of non-infringement of intellectual property rights of any third party.

SCH Title : CYW9BTM2BASE3-20829 Base Board

Page Title: Power Selction Headers & Level Translators

Size	Document Number	Drawn By	Approved By	Rev
A4	630-60651-01	INBA	RINKU	4.00

Date: Tuesday, August 08, 2023 Sheet 7 of 12

Reverse Voltage Protection

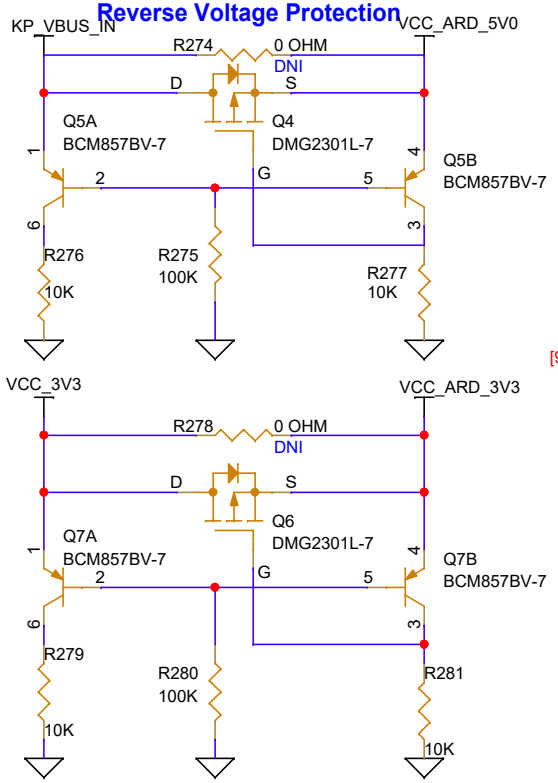

Arduino Headers

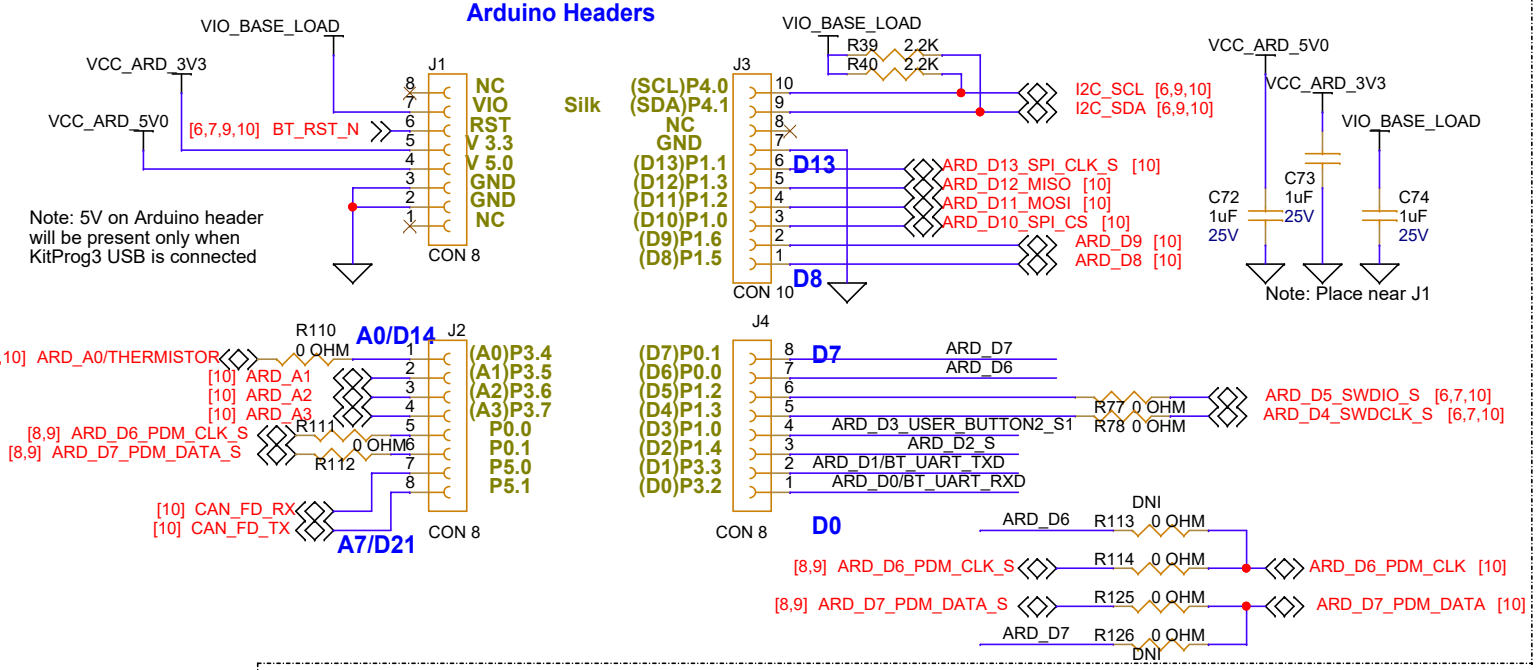

User LEDs

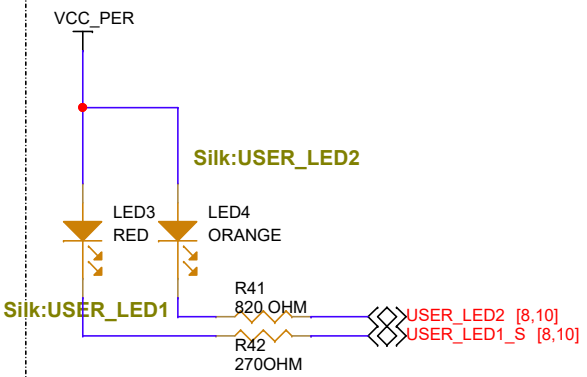

If user need to use this lines as GPIO through ARD sheild A6,A7 pins, Need to remove the R41 and R42

Extended GPIO Header

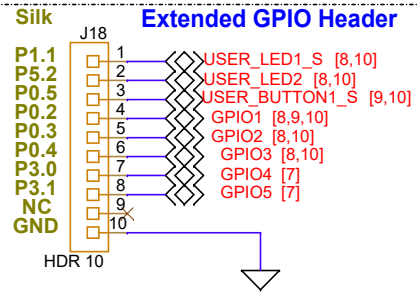

RGB LED

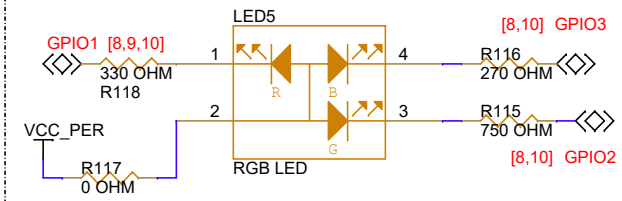

If user need to use GPIO1,GPIO2 &GPIO3 on the Extended Header, Need to remove the R117

```
GPIO1(P0.2) : RED
GPIO2(P0.3) : GREEN
GPIO3(P0.4) : BLUE
```

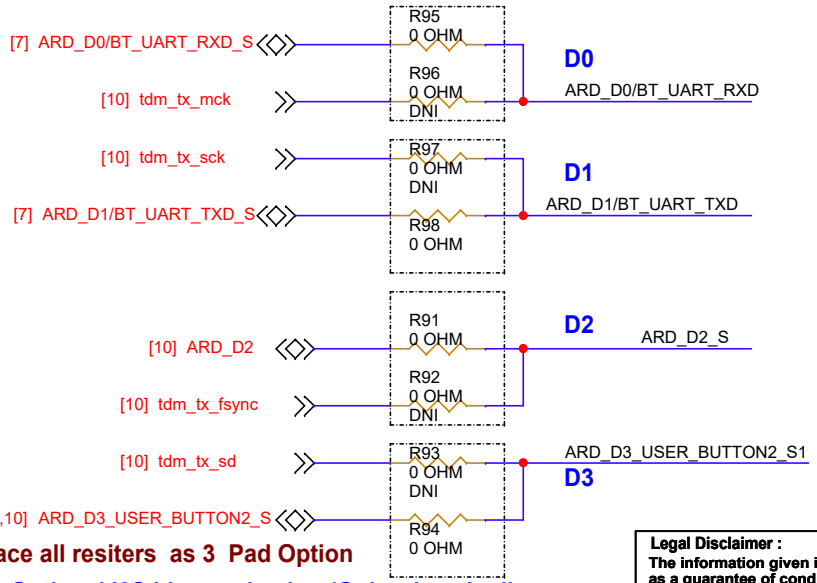

Place all resiters as 3 Pad Option

Optional I2S Lines selection (Only when Audio interface required)

Legal Disclaimer :
The information given in this document shall in no event be regarded as a guarantee of conditions or characteristics. With respect to any examples or hints given herein, any typical values stated herein and/or any information regarding the application of the device, Infineon Technologies hereby disclaims any and all warranties and liabilities of any kind, including without limitation, warranties of non-infringement of intellectual property rights of any third party.

SCH Title : CYW9BTM2BASE3-20829 Base Board				
Page Title: Arduino Headers & Peripherals				
Size	Document Number	Drawn By	Approved By	Rev
A4	630-60651-01	INBA	RINKU	4.00
Date: Monday, August 07, 2023		Sheet 8 of 12		

Digital MEMS Microphone

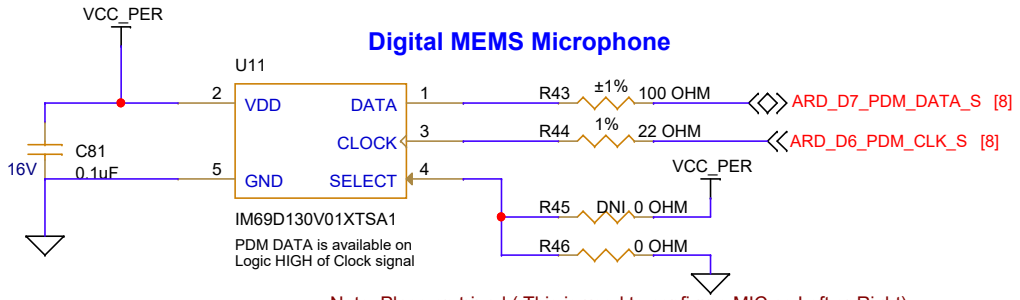

Note: Place on tripad (This is used to configure MIC as Left or Right)

Analog Microphone

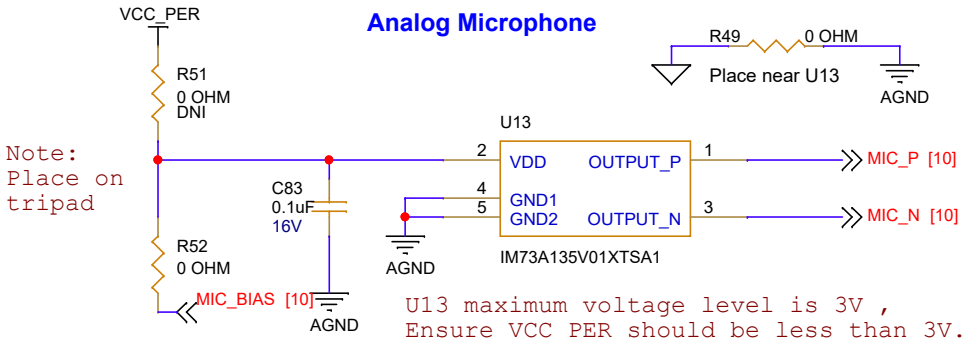

Note: Place on tripad

U13 maximum voltage level is 3V , Ensure VCC_PER should be less than 3V.

On Board Sensor Enable jumper

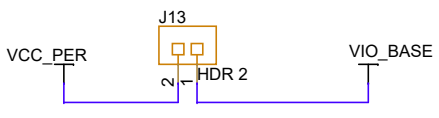

Silk:PERIPH ENABLE

User Buttons

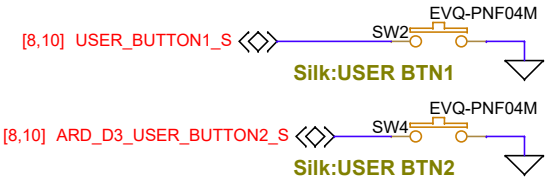

Thermistor

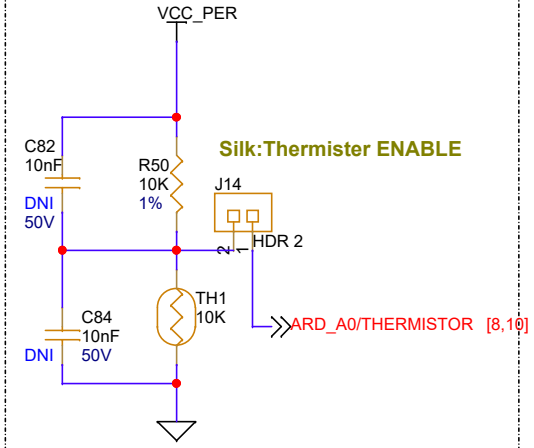

IMU Sensor

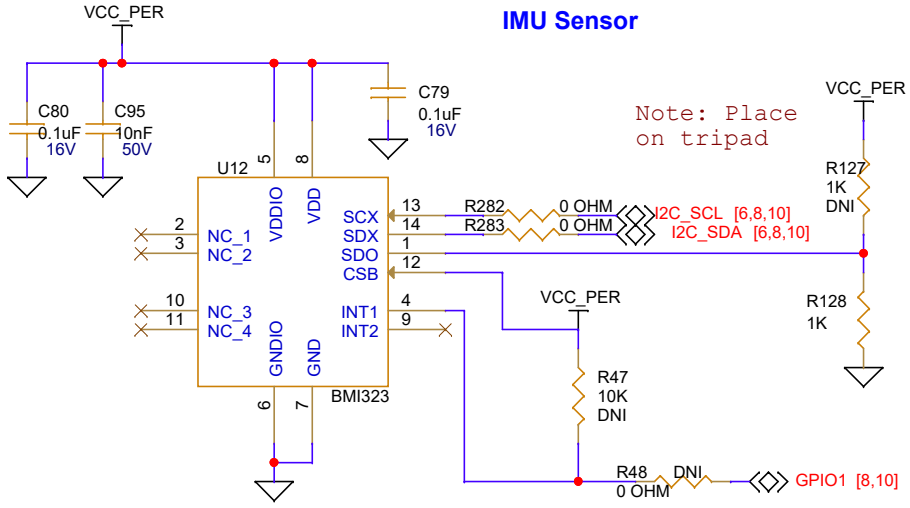

Note: Place on tripad

RESET BUTTON

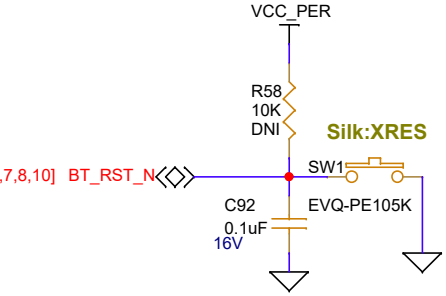

On Board QSPI flash

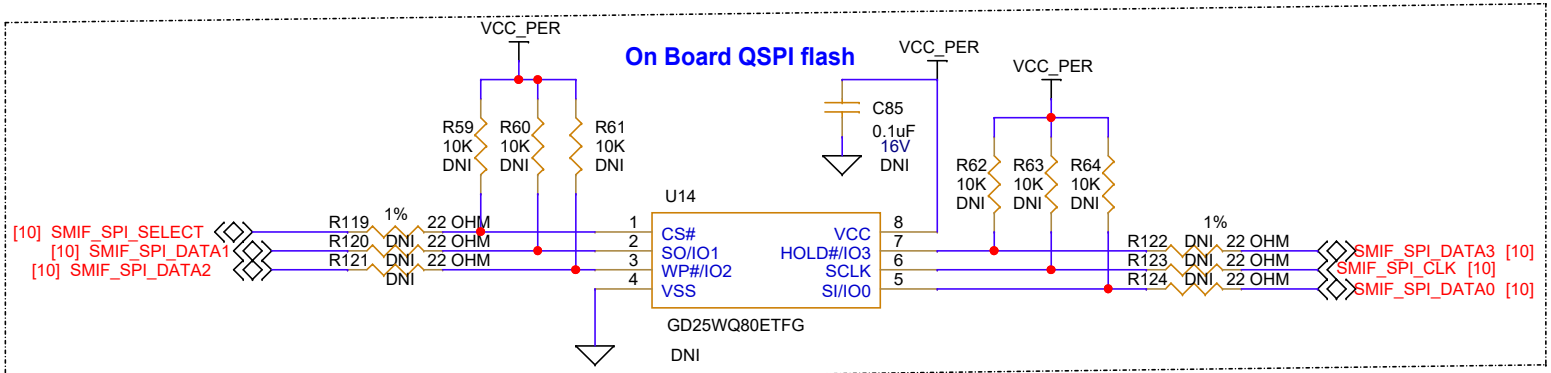

Legal Disclaimer :
The information given in this document shall in no event be regarded as a guarantee of conditions or characteristics. With respect to any examples or hints given herein, any typical values stated herein and/or any information regarding the application of the device, Infineon Technologies hereby disclaims any and all warranties and liabilities of any kind, including without limitation, warranties of non-infringement of intellectual property rights of any third party.

SCH Title : CYW9BTM2BASE3-20829 Base Board				
Page Title: IMU, DMIC and AMIC				
Size	Document Number	Drawn By	Approved By	Rev
A4	630-60651-01	INBA	RINKU	4.00
Date: Monday, August 07, 2023		Sheet 9 of 12		

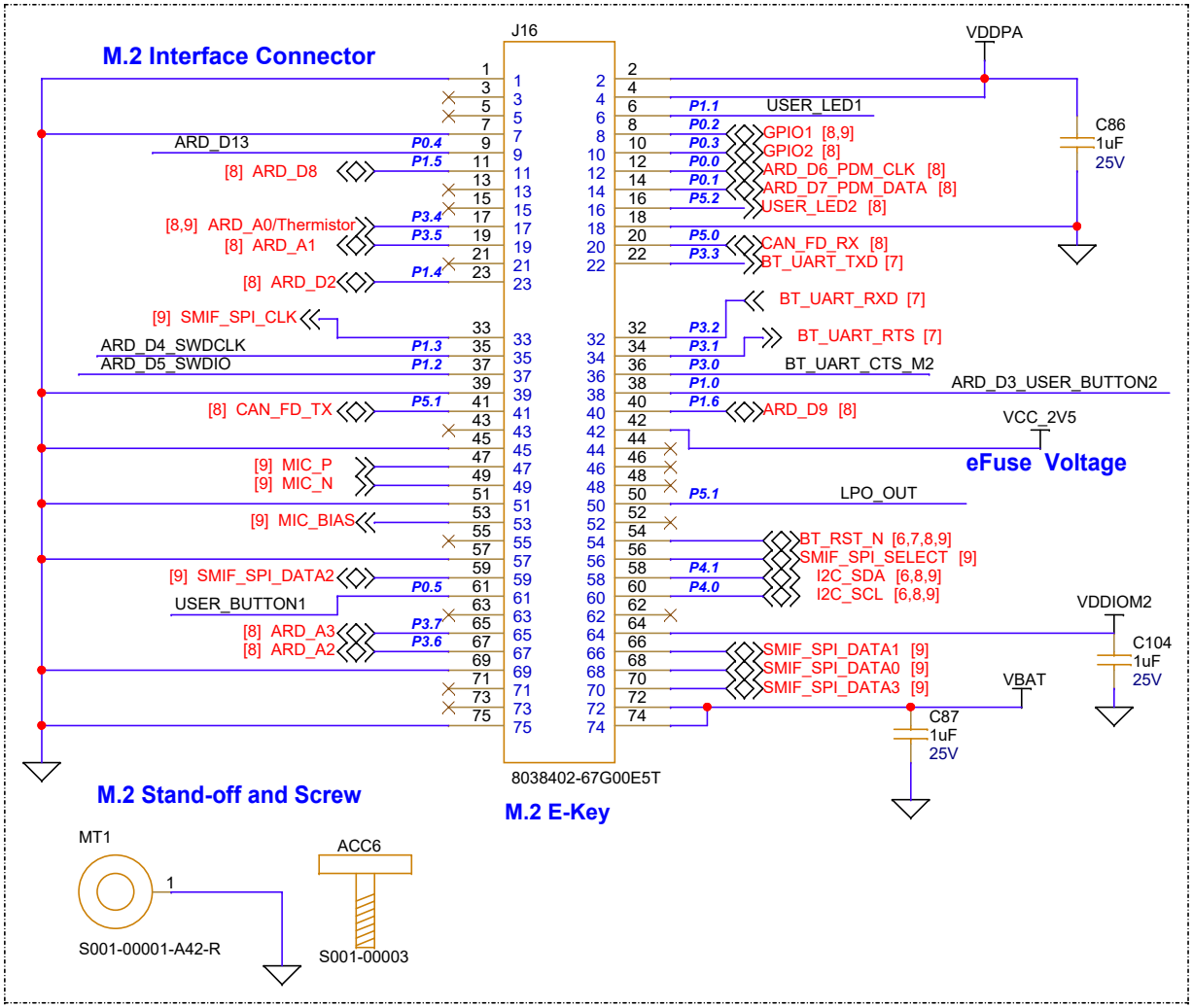

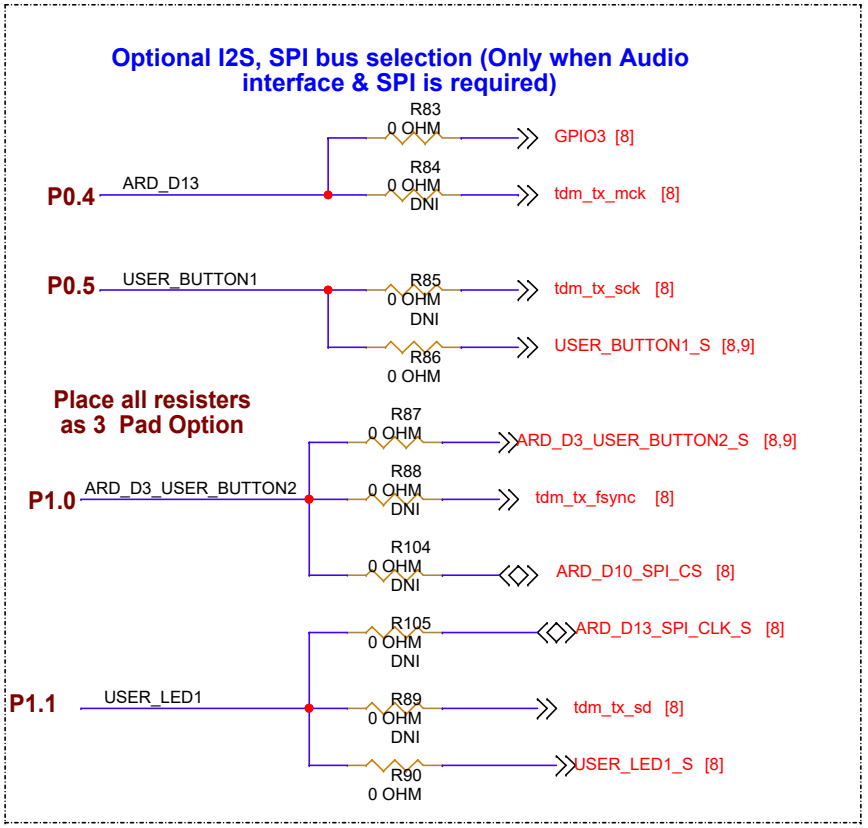

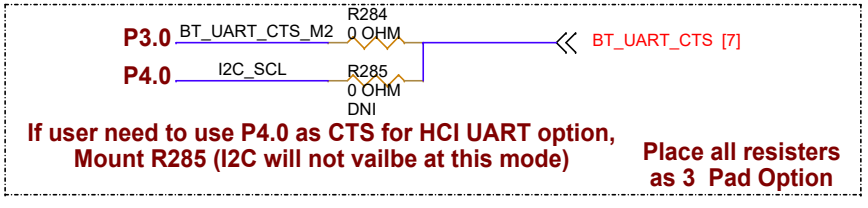

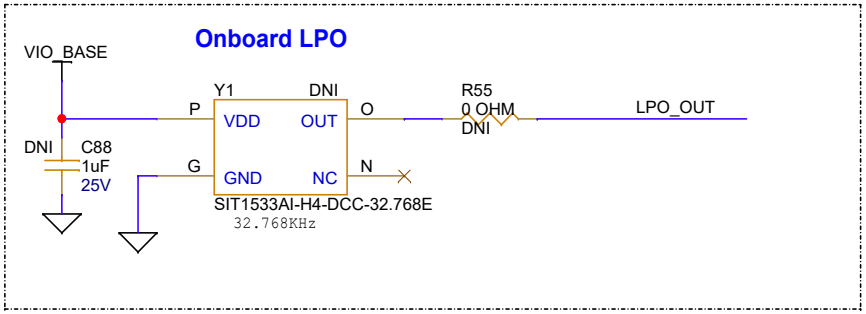

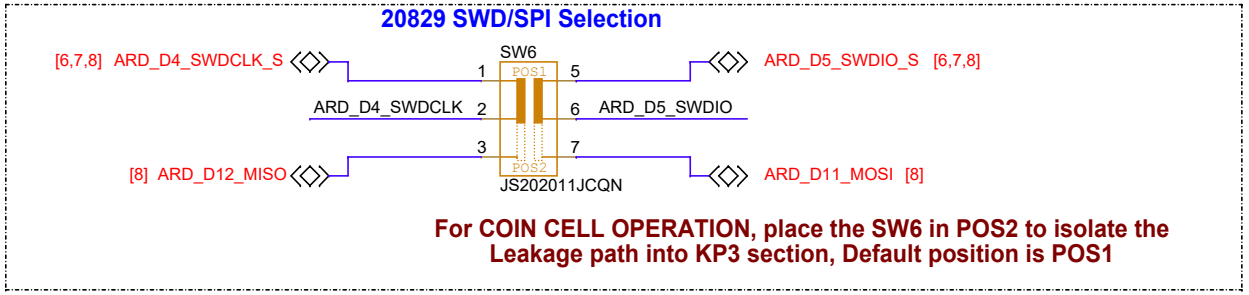

Legal Disclaimer :
The information given in this document shall in no event be regarded as a guarantee of conditions or characteristics. With respect to any examples or hints given herein, any typical values stated herein and/or any information regarding the application of the device, Infineon Technologies hereby disclaims any and all warranties and liabilities of any kind, including without limitation, warranties of non-infringement of intellectual property rights of any third party.

SCH Title : CYW9BTM2BASE3-20829 Base Board				
Page Title: M.2 Interface				
Size	Document Number	Drawn By	Approved By	Rev
A4	630-60651-01	INBA	RINKU	4.00
Date: Tuesday, August 08, 2023		Sheet 10 of 12		

Accessories

Cylindrical Bump-ons

ACC7 SJ61A4

ACC8 SJ61A4

ACC9 SJ61A4

ACC10 SJ61A4

PCBA label

ACC12

PCA Label

QR Code Label

QR CODE Label

Jumper Shunts

ACC13 151-8010-E

ACC14 151-8010-E

ACC15 151-8010-E

ACC16 151-8010-E

ACC17 151-8010-E

ACC18 151-8010-E

Legal Disclaimer :
The information given in this document shall in no event be regarded as a guarantee of conditions or characteristics. With respect to any examples or hints given herein, any typical values stated herein and/or any information regarding the application of the device, Infineon Technologies hereby disclaims any and all warranties and liabilities of any kind, including without limitation, warranties of non-infringement of intellectual property rights of any third party.

SCH Title : CYW9BTM2BASE3-20829 Base Board

Page Title: Accessories

Size	Document Number	Drawn By	Approved By	Rev
A4	630-60651-01	INBA	RINKU	4.00

Date: Monday, August 07, 2023 Sheet 11 of 12

REVISION HISTORY

REV	DESCRIPTION OF CHANGE	Orig. of Change	DATE
1.00	Final Release for Rev 1 Board	INBA	13/12/2022
2.00	1.Board part number to be printed in silk CYW9BTM2BASE3) 2.Add port numbers for BT UART lines in silk (in bottom side) 3.Swap the silk of USER LED 1 and USER LED2 near to component 4.Change the VDDPA and VABT Silk as per schematic(Swap the VDDPA and VBAT silk) 5.O/P VOLT -> change to VBAT, VIO. BASE, VDDPA respectively in voltage selection headers 6.Changed the silk numbering same as U11 for U13 also	INBA	24/02/2023
2.01	1.IMU part 415-00025-01 is replaced with new part 415-00027-01 2.R37 resistor value changed from 100K to 1K 3.R47 resistor changed to DNI 4.R41,R42 value changed from 100ohm to 820ohm&270ohm 5.VDDPA &VBAT Nets are swapped in M.2 connector 6.USER LED1 and USER LED2 nets swapped near LED 7. Load switch U8,U9,U10,U15 is removed and changed to MOSFT based circuit 8.Power staus LED circuit is modifed from Load SW control to MOSFET based 9.Added series 0ohm isolation resistor near IMU for I2C interface 10.KP3 HW ID changed from 0x0B to 0x0C 11.Added eFuse voltage selection option into VDDIO current measurement jumper 12.Added selection option for CTS as P3.0 or P4.0 for HCI mode operation	INBA	28/02/2023
3.00	Final Release	INBA	20/03/2023
4.00	1.R269 is changed to DNI 2.EXT_LPO Configuration changed as below a) M.2 Pin 20 connected to CAN_FD_RX b) M.2 Pin 41 connected to CAN_FD_TX c) M.2 Pin 50 connected to LPO_OUT 3.I2C line swap option removed 4.Added SW5,SW6 for isolating I2C and SWD lines during Coin Cell operation, which creates leagake path 5.EoL part TLS205B0LDVXUMA1(10-TFDFN) is replaced with new part TLS205B0EJVXUMA1(8-DSO) 6.Debug/Programmer connector part changed from FTSH-105-01-L-DV-K-P-TR to 3220-10-0100-00 for cost reduction	INBA	08/08/2023

Legal Disclaimer :
The information given in this document shall in no event be regarded as a guarantee of conditions or characteristics. With respect to any examples or hints given herein, any typical values stated herein and/or any information regarding the application of the device, Infineon Technologies hereby disclaims any and all warranties and liabilities of any kind, including without limitation, warranties of non-infringement of intellectual property rights of any third party.

SCH Title : CYW9BTM2BASE3-20829 Base Board

Page Title: Revision History

Size	Document Number	Drawn By	Approved By	Rev
A4	630-60651-01	INBA	RINKU	4.00

Date: Tuesday, August 08, 2023 Sheet 12 of 12